DRYWALL MASTER TOOLS, INC.

PUMP & PUMP ADAPTER SCHEMATIC

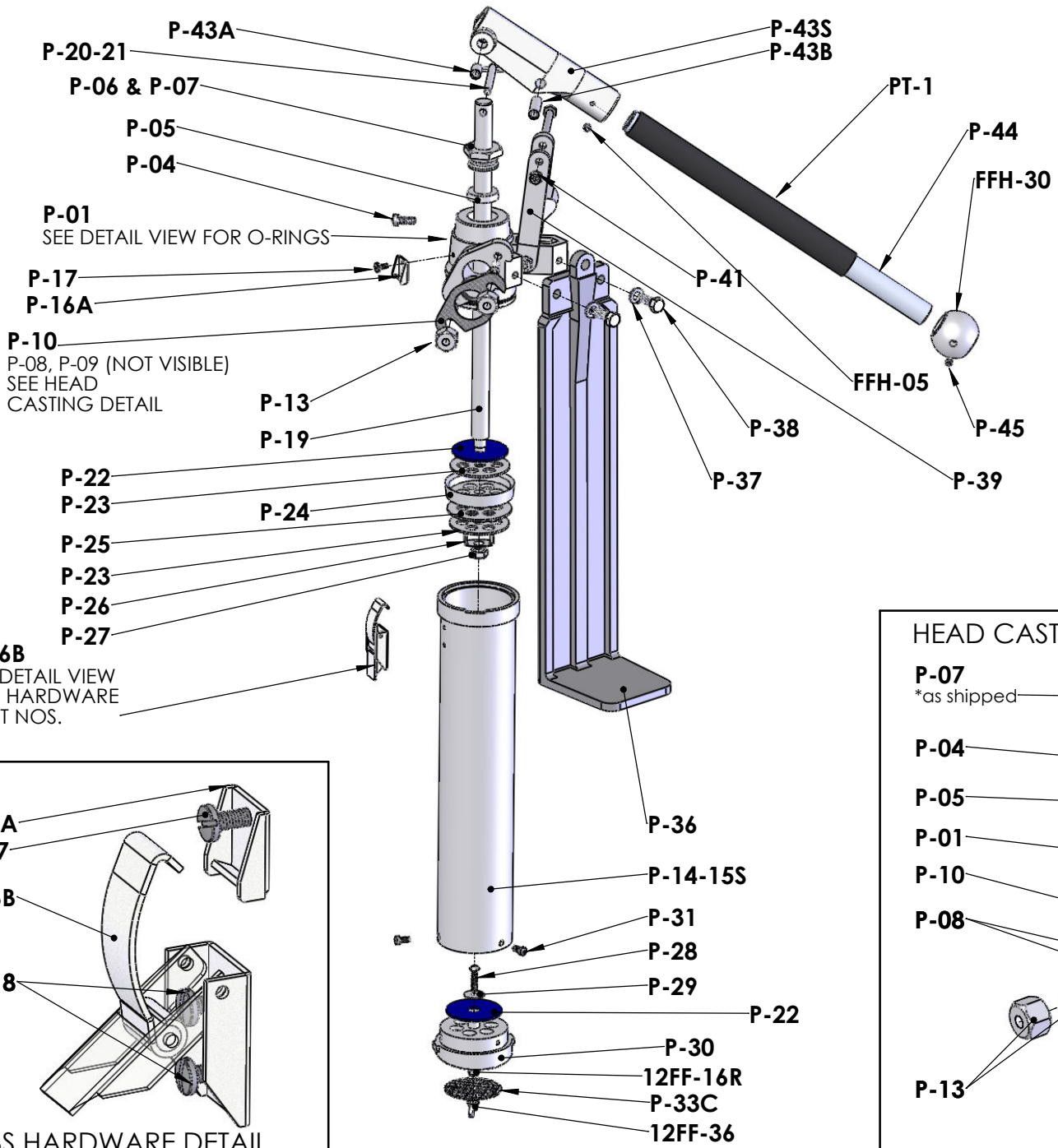

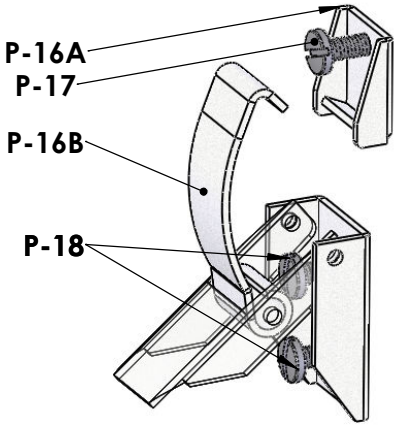

P-16S HARDWARE DETAIL

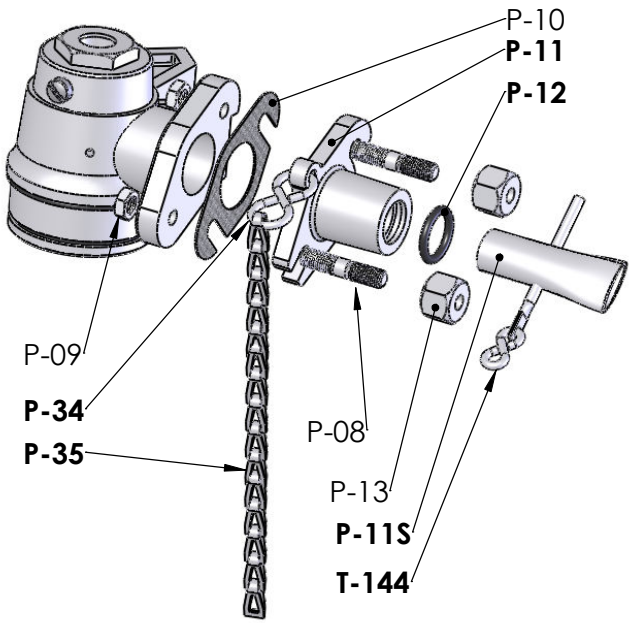

P-08, P-09 DETAILS.
PUMP ADAPTER DETAILS. (ITEMS IN BOLD)
*(PUMP ADAPTER NOT INCLUDED WITH PUMP)
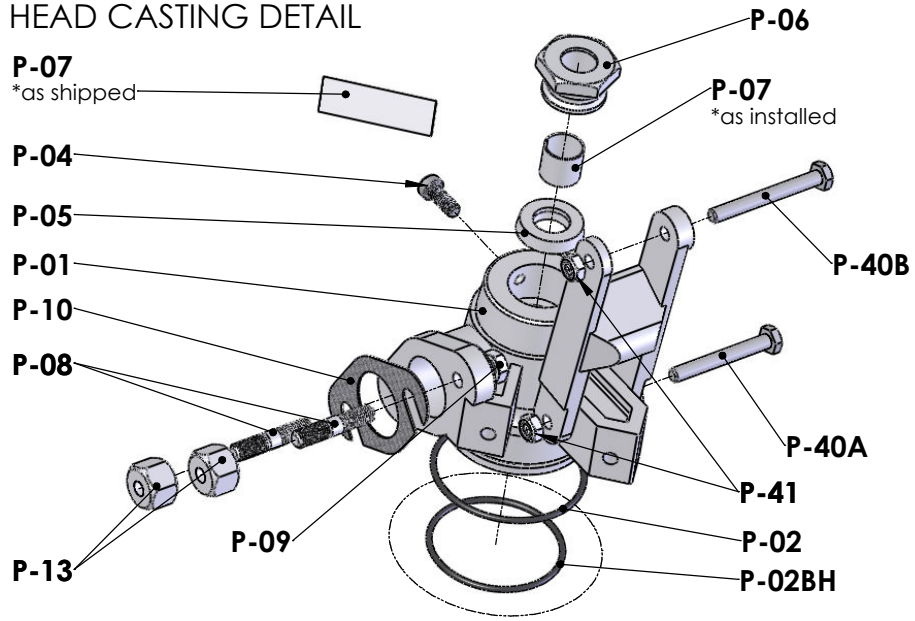
HEAD CASTING DETAIL